Hampton Teak 42 In Bathroom Vanity

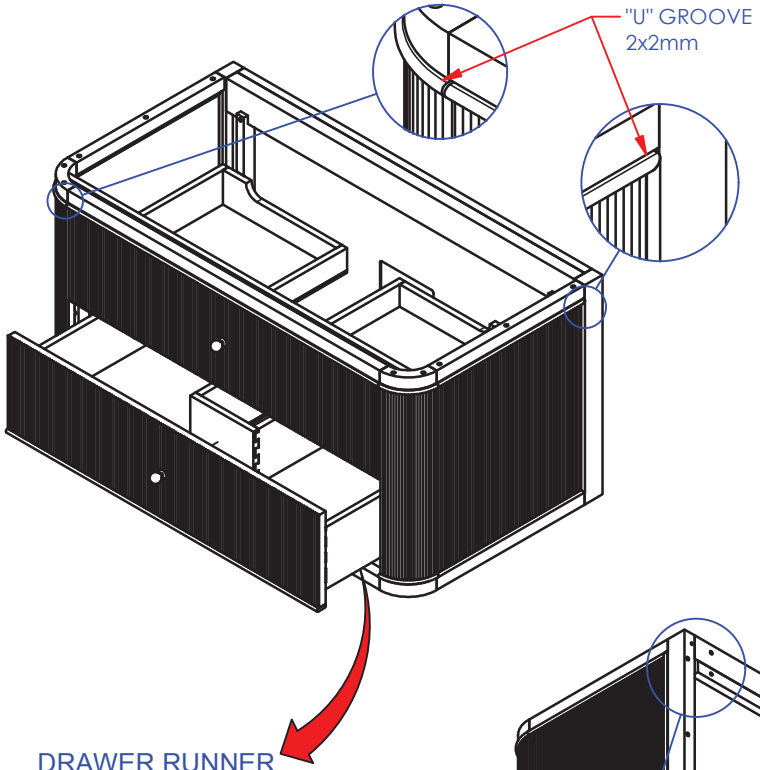

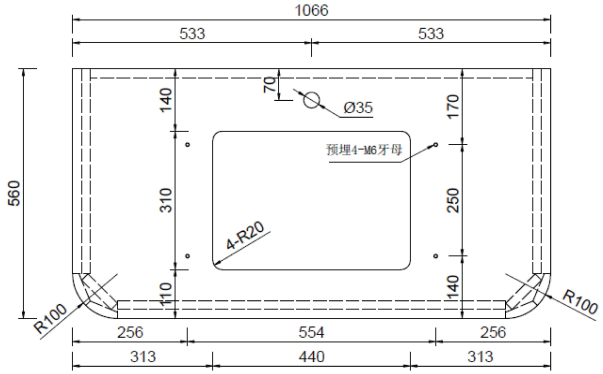

REFERENCE WASH BASIN

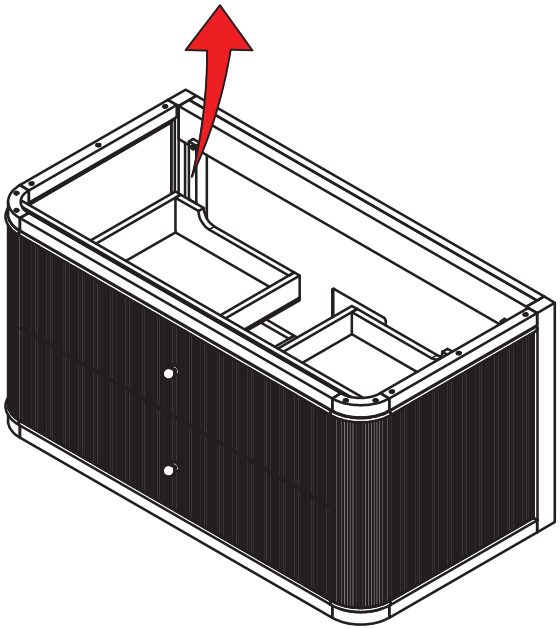

DRAWER RUNNER
UNDERMOUNT SOFTCLOSE
FULL EXTENTION (FGV) 400mm

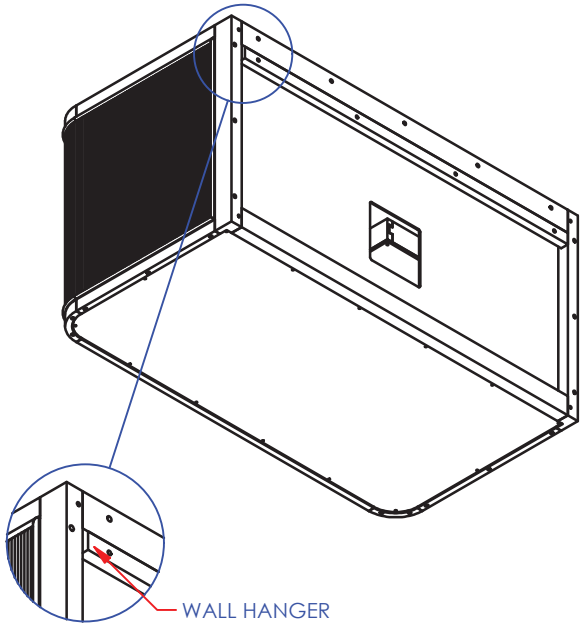

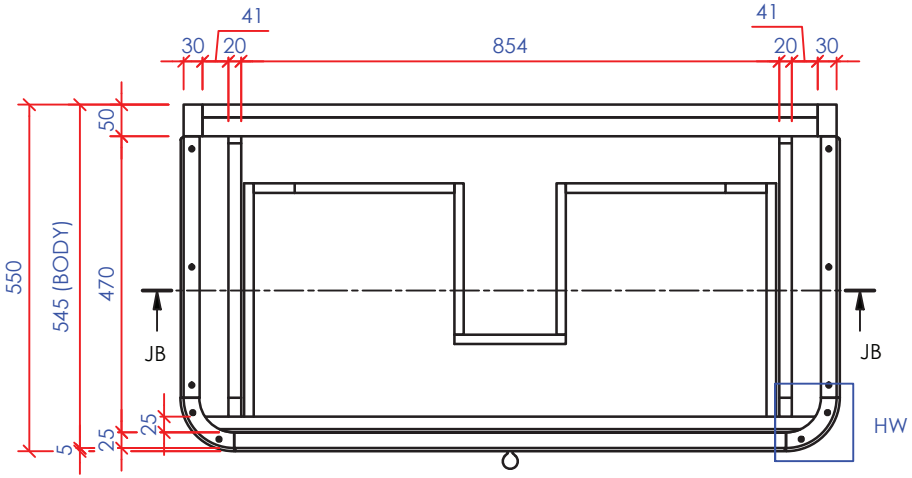

TAMPAK ATAS (1 : 12)

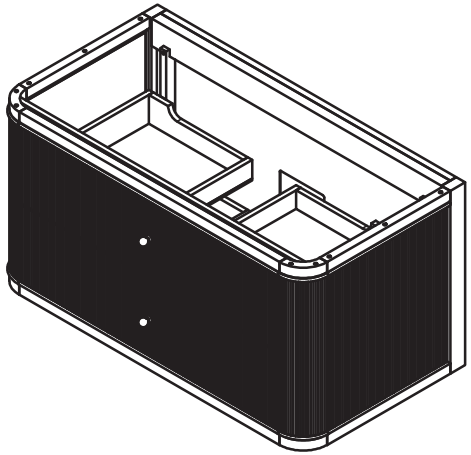

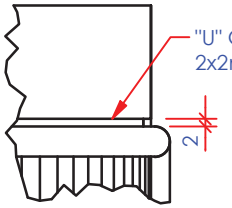

WL (1 : 2)

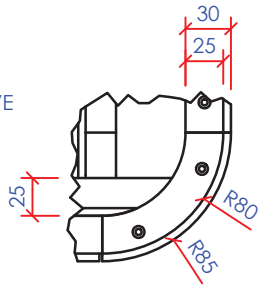

HW (1 : 5)

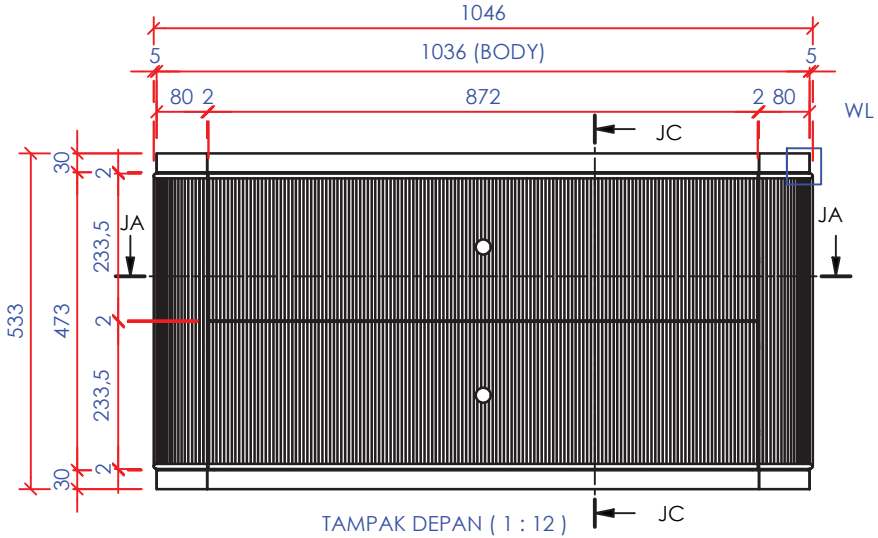

TAMPAK DEPAN (1 : 12)

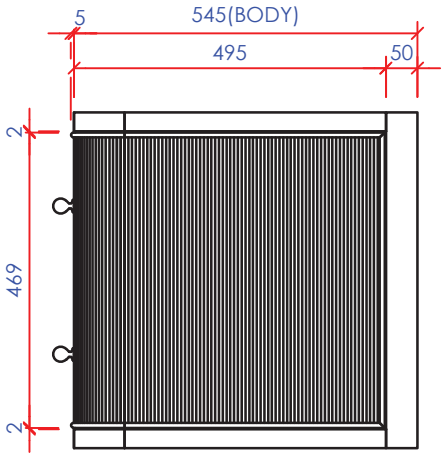

TAMPAK SAMPING (1 : 12)