TECHNICAL DRAWING

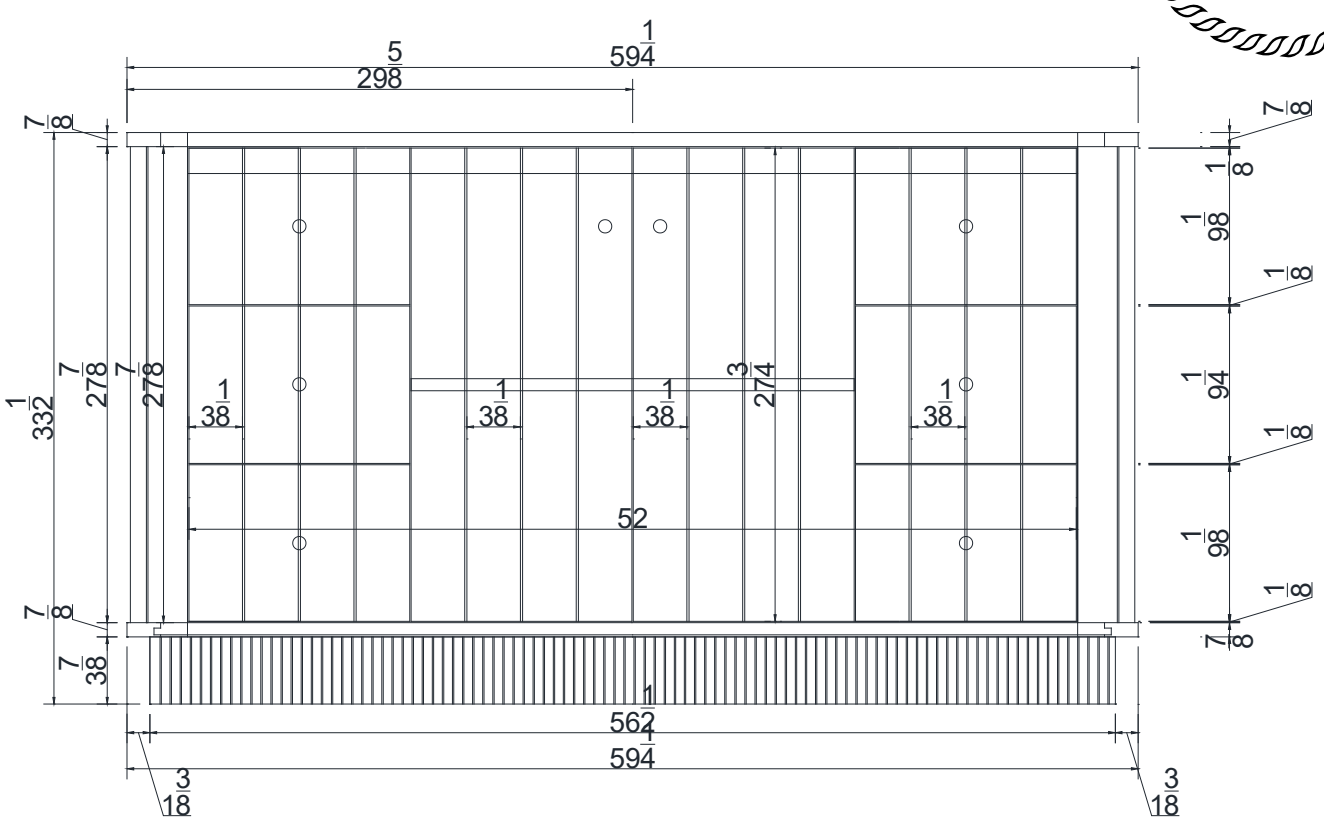

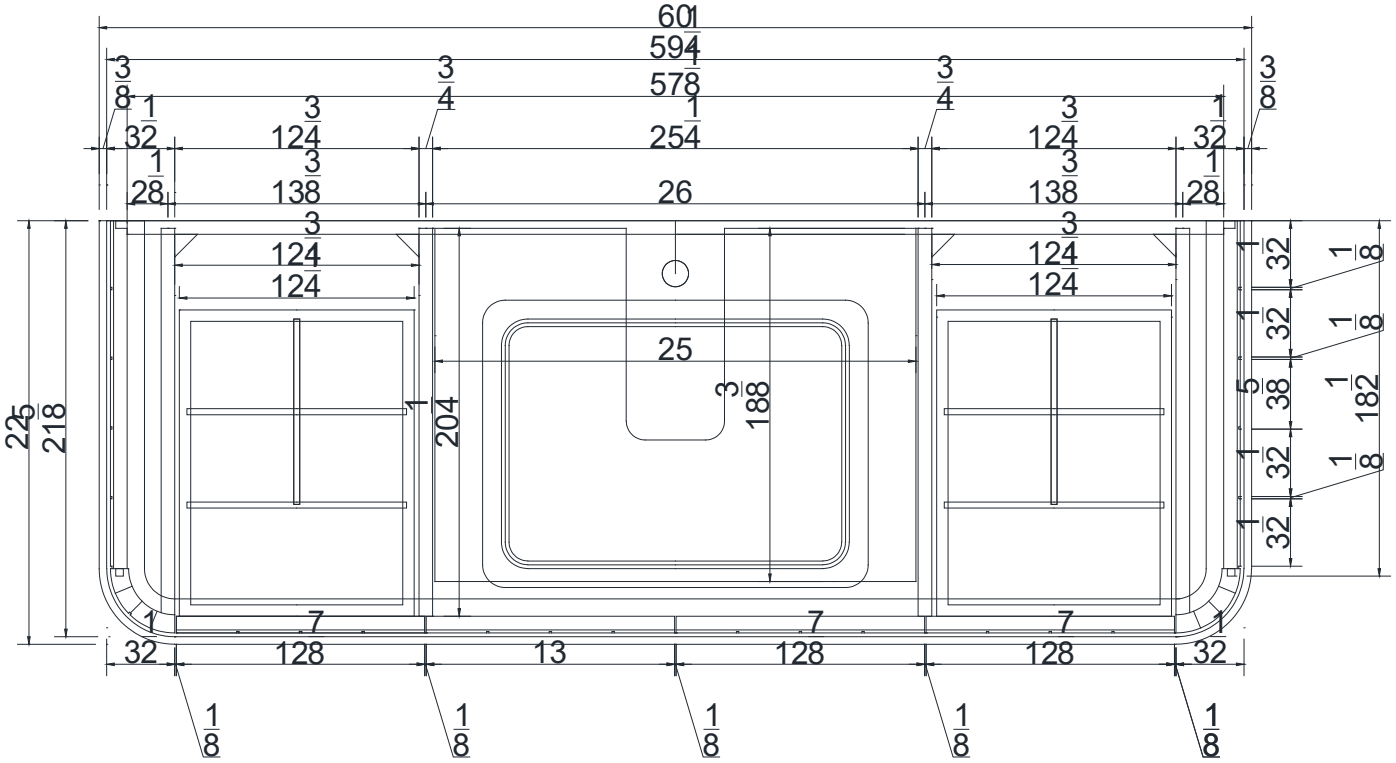

Solid Wood Construction Bathroom Vanity

TECHNICAL DRAWING

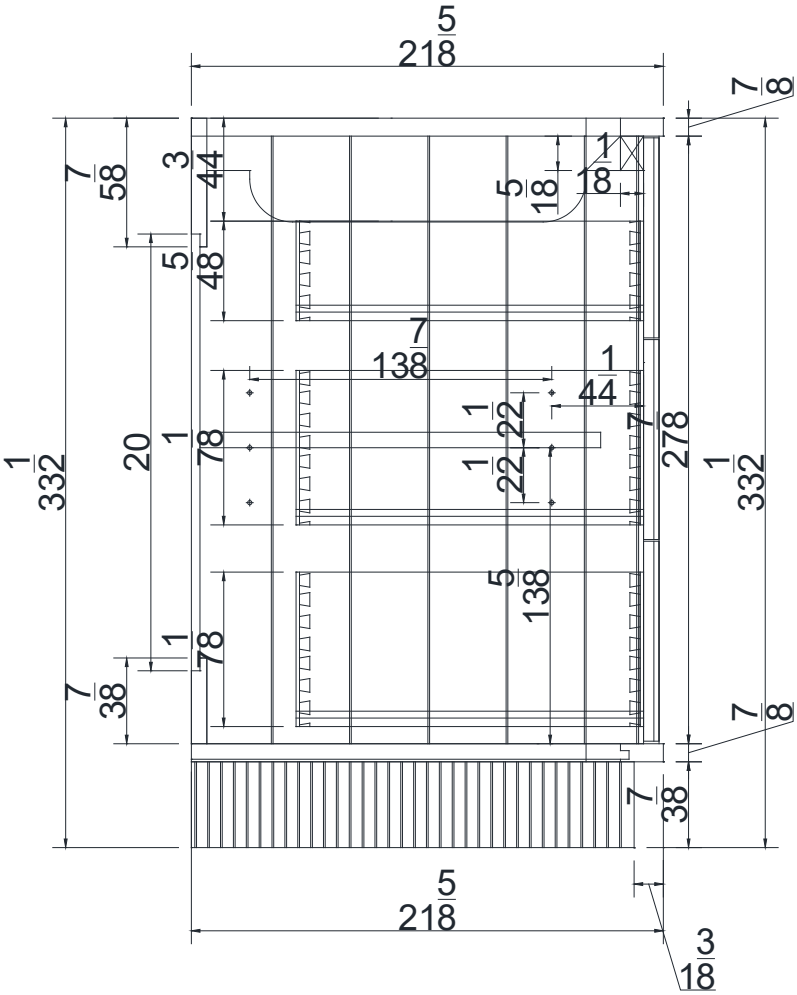

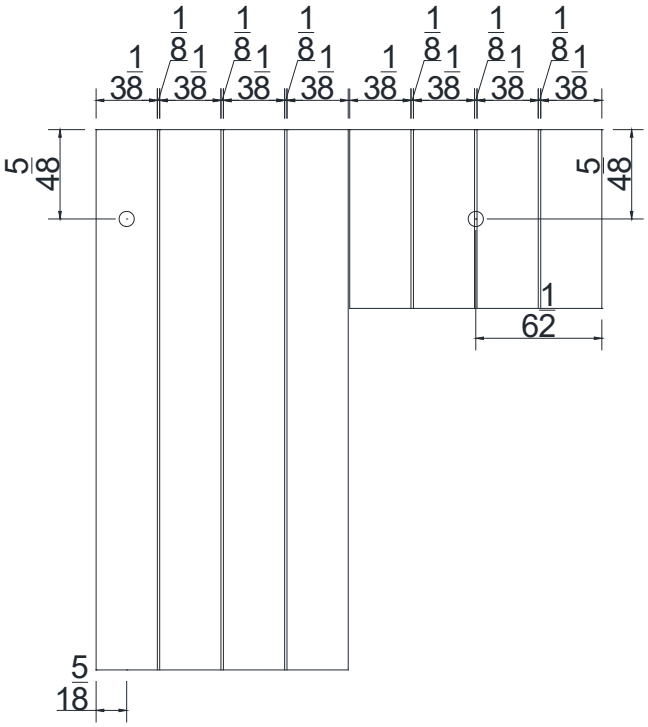

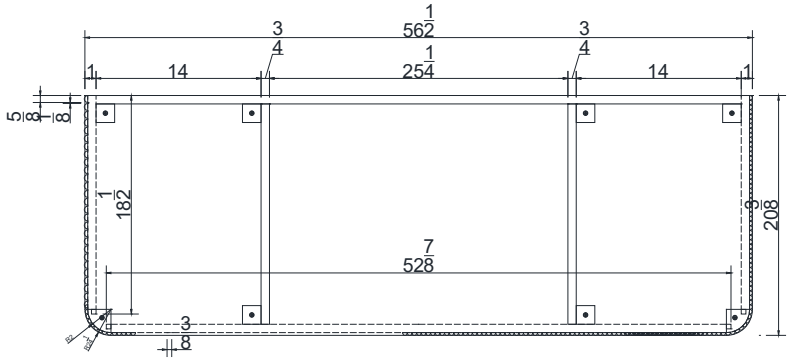

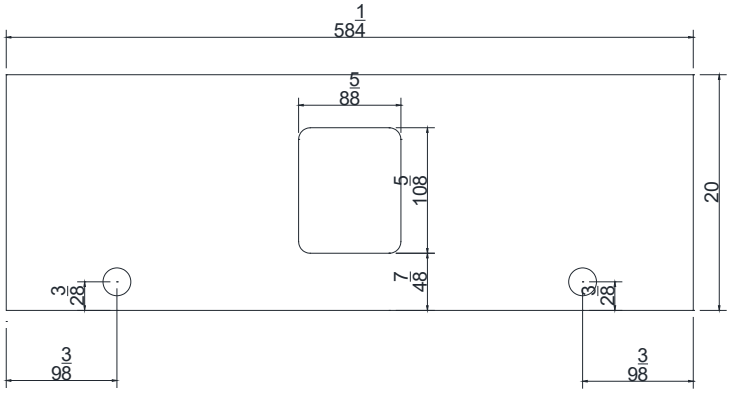

Solid Wood Construction Bathroom Vanity